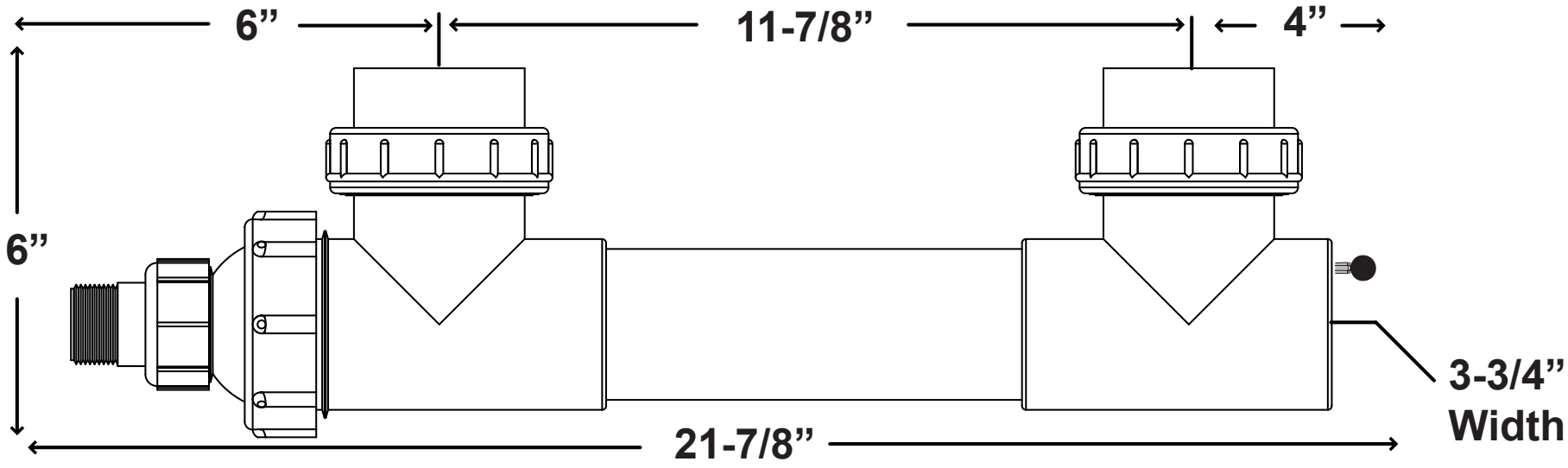
6”
11-7/8”
4”
6”
3-3/4”
Width
21-7/8”

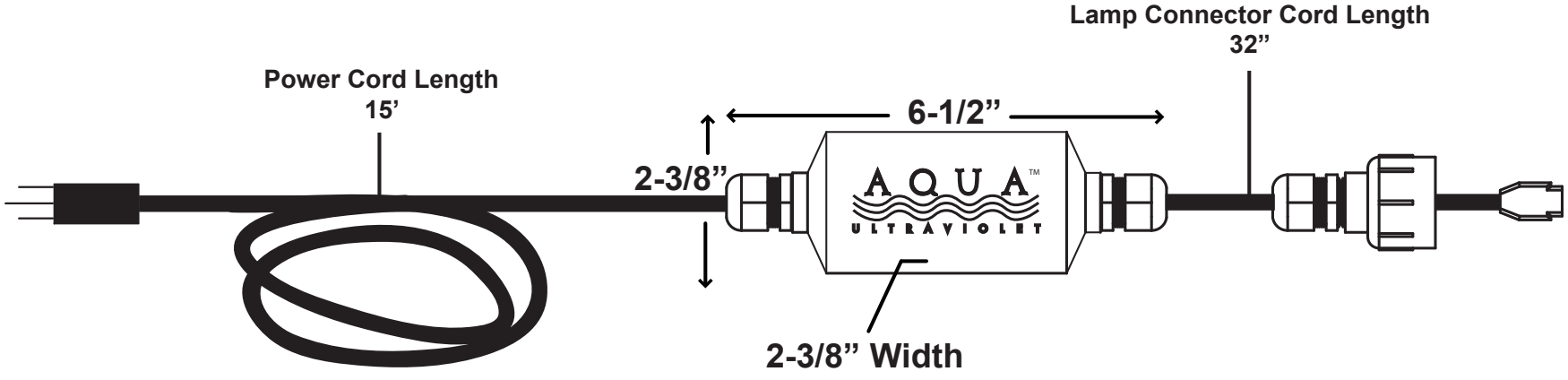
Lamp Connector Cord Length
32”
Power Cord Length
15’
6-1/2”
2-3/8”
AQUA
ULTRAVIOLET
2-3/8” Width