aXs Lift

The aXs lift is the perfect addition to any hotel, aquatic facility or community pool, with its low profile and attractive appearance.

- 3rd party tested & verified ADA compliant
- 300 lb/136 kg lifting capacity
- Easily removable from LiftLock stainless steel deck anchor
- Powered by the LiftOperator Intelligent Control
- True operational redundancy – lift can be operated from the control box and the handset
- 360° rotation ensures a safe transfer area
- Made from powder coated stainless steel and aluminum

Model No.	Description	Shipping Wt.	L	W	H
AXS1000L	aXs	125 lbs.	40"	48"	48"
AXS1005L	aXs with armrests	131 lbs.	40"	48"	48"
AXS1006L	aXs with caddy	225 lbs.	40"	48"	57"
AXS1007L	aXs with armrests, caddy	225 lbs.	40"	48"	57"

Includes battery, charger, battery console cover, waterproof control, LiftLock stainless steel anchor socket with cover, footrest and seat belt assembly.
To order a lift with an Activation Key (for LiftOperator), add a K to the end of the part number.
Ships Class 85

New! LiftLock

The new LiftLock Locking Square Deck Anchor ensures a smoother ride.

aXs Caddies are only compatible with aXs lifts containing these pegs at the base.

A completed Deck Profile form is required with your pool lift order.

Accessories:

- AX2320 Arm Rest Assembly
- AX9000 Total Cover
- 500-1000 Spineboard Attachment
- 900-2000 Stability Vest
- 300-6200L LiftLock
- 400-2000-AX Caddy*

* ONLY compatible with AXS1000L, AXS1005L, AXS1006L and AXS1007L

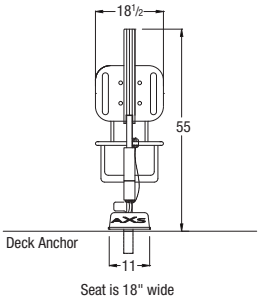

BACK VIEW

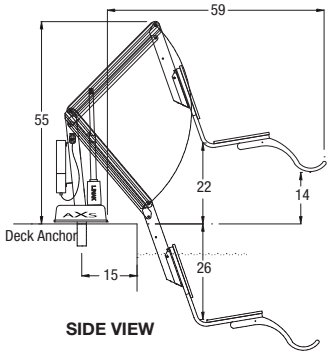

SIDE VIEW

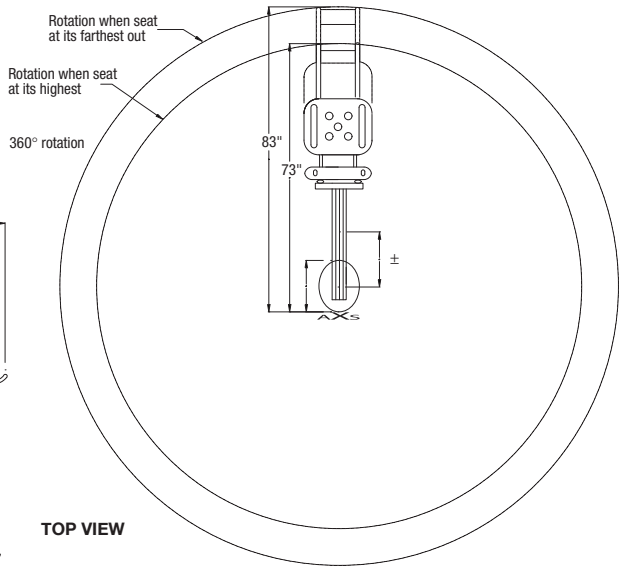

TOP VIEW

Copyright © 2012, S.R.Smith, LLC. All rights reserved.