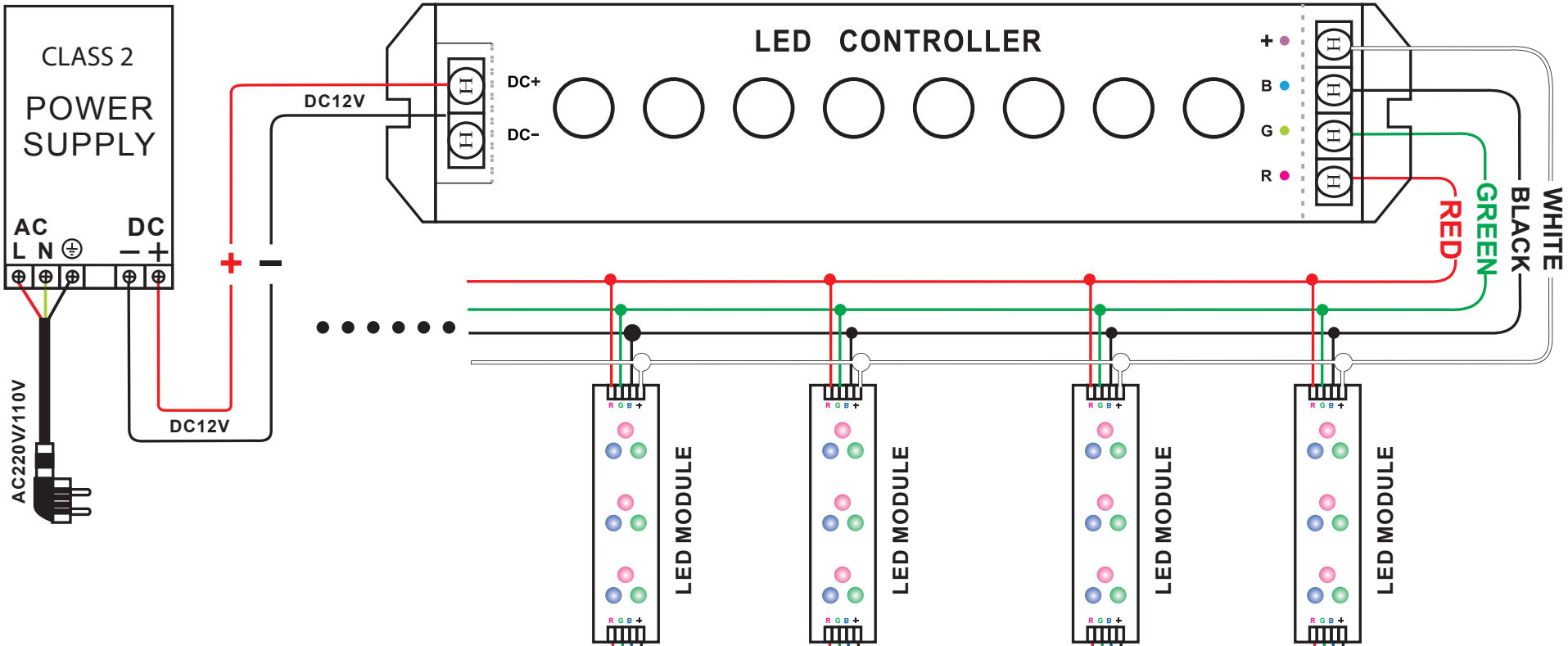
CLASS 2
POWER SUPPLY
AC
L N
DC
− +
AC220V/110V
DC12V
DC12V
+ −
LED CONTROLLER
DC+
DC−
+
B
G
R
RED
GREEN
BLACK
WHITE
LED MODULE
LED MODULE
LED MODULE
LED MODULE