AQUASTAR® pool products

*A Safe Drain is No Accident™*

# CHEMSTAR® CLEAR OFF-LINE CHLORINATOR

## Sanitation made easy

ChemStar®

## FEATURES

- Freestanding model – ideal for retrofitting existing pools for automatic sanitization
- Installs easily on the pressure side of the pump, downstream of the filter and heater
- Clear pipe shows amount of chlorine/ bromine in the unit without removing the lid
- Transparent molded UV- and chemical-resistant body
- Standard with 2-inch slip PVC fittings and adapters for 1½ inch
- Completely enclosed system – no escaping gases, so no special venting is required
- 50 PSI maximum operating pressure
- External fine control valve adjusts feed rate to meet specific pool or spa needs
- Top-load large or small Trichlor or Bromine slow-dissolving tablets for an effective, trouble-free way to sanitize pool or spa
- Replacement parts and kits available from ProStar® Replacement Parts
- 1 per case

**U.S. patents pending**

Part # CH200CLR

**STANDARD COLORS**

☐ Clear

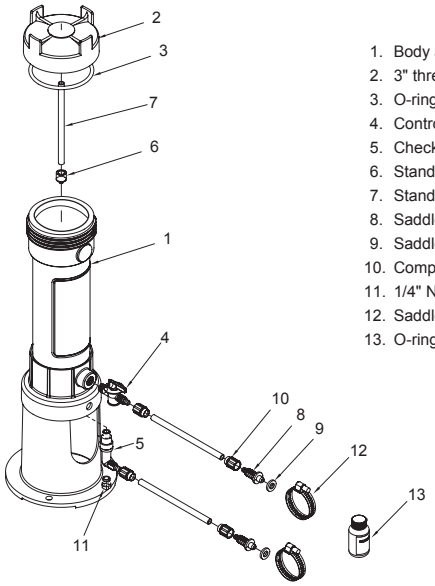


1. Body assembly, stand, offline feeder
2. 3" threaded cap
3. O-ring, cap, #343, viton
4. Control valve, offline feeder
5. Check valve elbow
6. Standpipe adapter
7. Standpipe, qty 3
8. Saddle tube fitting, qty 2
9. Saddle gasket, qty 2
10. Compression nut, qty 2
11. 1/4" NPT plug, optional
12. Saddle clamp, qty 2
13. O-ring silicone lube

**P** 877-768-2717 **F** 877-276-POOL Outside the US: **P** +1-805-620-5060 **F** +1-949-336-1940
info@aquastarpoolproducts.com www.aquastarpoolproducts.com

★★ PROUDLY MADE ★★ IN THE USA