STANDARD COLORS 01 02 03

ProStar # HWN120
REPLACES # AXV699P

A-Frame Bushing and Saddle Kit

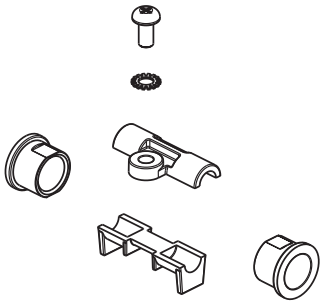

ProStar # HWN154
REPLACES # AXV079VP

Medium Turbine/Spindle Gear Kit

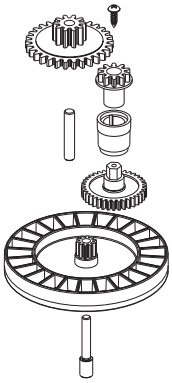

ProStar # HWN160xx
REPLACES # AXV622DPK

Propulsion/Conversion Kit

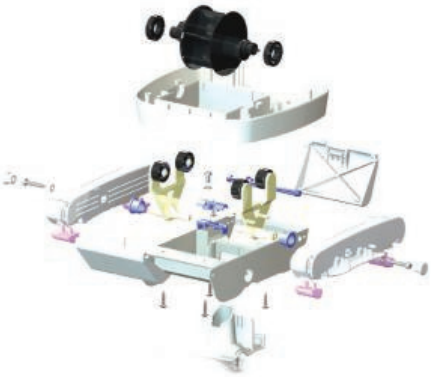

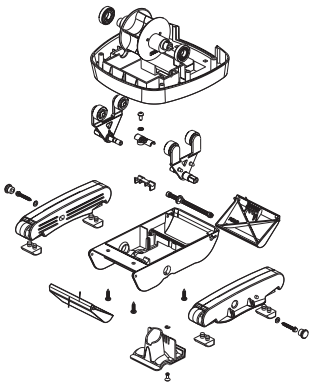

ProStar # HWN164xx
REPLACES # AXV621417
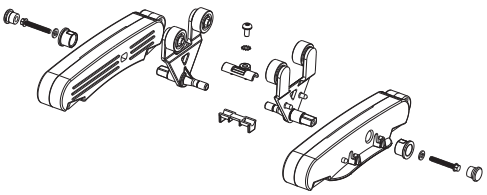
Pod Kit and A-Frame Kit