WATERCO
water, the liquid of life

OPAL-HYDROTUF
SKID PACK

The Complete Pool Filtration Solution

The Opal-Hydrotuf Skid Pack is a hydraulically efficient & compact filtration system that features a premium high flow pump and a low maintenance, water saving cartridge filter with the option of Waterco's award winning MultiCyclone centrifugal pre-filter

Easy Installation
- Saving time and money

Compact Design
- Foot print of only 59m²

enviropro

Opal Cartridge Filter

Constructed from high impact polypropylene and designed for easy maintenance, the filter's screw on lock ring allows easy access to the filter cartridge for removal, cleaning and installation in a matter of minutes.

- Lid removal handles.
- Air relief valve.
- Strong & durable one piece moulded construction. UV stabilised and corrosion resistant.
- Low profile design for easy cartridge removal and inconspicuous enclosure.
- Easy to read pressure gauge.
- Hand operated lid lock ring, allowing simple cartridge removal and replacement.
- The filter cartridge is fabricated from reusable pleated polyester fabric to maximise its filter surface area and minimise filter maintenance.
- 50mm quick connect barrel unions for UPVC pipe.

Warranty

Opal Cartridge Filter	10 years (conditional)*
Tank	(5+5) years
All other components	1 year
Commercial applications	1 year
Labour	1 year

* Please refer to Waterco's warranty terms and conditions.

MultiCyclone Filter

Waterco's award winning MultiCyclone centrifugal pre-filter is a brilliant pre-filtration device works on the basis of centrifugal water filtration and is designed with no moving parts and no filter media to clean or replace. MultiCyclone pre-filters up to 80% of incoming sediment allowing only 20% to reach the Opal filter cartridge, drastically reducing filter maintenance and only requiring 15 litres of water to cleanse.

- 50mm / 2" quick fit unions.
- Hydraulically efficient design.
- UV stabilised and corrosion resistant.
- 16 multiple hydro cyclones.
- Glass filled reinforced thermoplastic.
- Lock ring.
- The MultiCyclone is easily cleansed by opening its 25mm / 1" purge valve.
- Clear poly carbonate sediment chamber.

Warranty

MultiCyclone	2 years (conditional)*
Commercial applications	1 year
Labour	1 year

* Please refer to Waterco's warranty terms and conditions.

SPASA Most innovative product award 2008

Smart Approved WaterMark

2007 Piscina Barcelona Sustainability Award

Hydrotuf Pump

Hydrotuf is a high flow pump equipped with an innovative lid and lock ring for easy access to a large capacity 2.25L strainer basket, minimising pump maintenance.

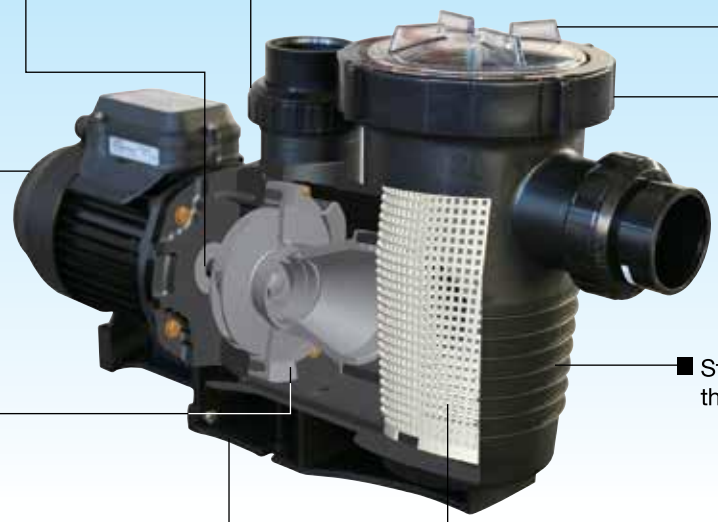

Hydrotuf Pumps Performance Curves

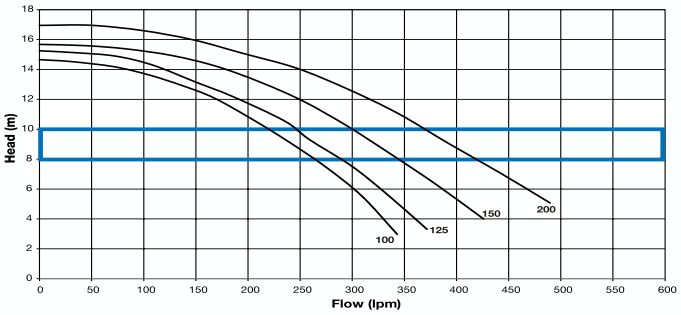

Hydrotuf Pumps Noise Curves

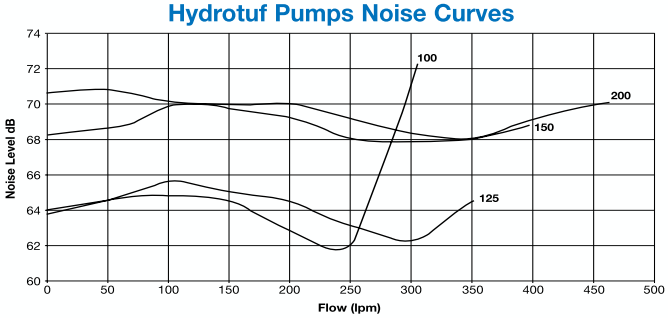

Technical Specifications

Model	Flow rate (lpm)		Nominal Power (hp)	Motor input (kW)	Amps	Weight (kg)	Total Length	Motor Frame	Pump Rating
	8m head	10m head							
Hydrotuf 100	265	220	1.00	0.86	4.0	9.60	651	71	IPX5
Hydrotuf 125	280	245	1.25	0.95	4.0	9.60	651	71	IPX5
Hydrotuf 150	340	300	1.50	1.10	4.7	12.60	691	80	IPX5
Hydrotuf 200	420	370	2.00	1.50	6.8	12.60	691	80	IPX5

Phase	Volts	Cycle	RPM
1	220- 240	50	2860

Warranty

Pumps	3 years (conditional)*
Wet end	3 years
Motor, mechanical seal, hair & lint pot lid, o'ring, basket, impeller & diffuser	2 years
Commercial applications	1 year
Labour	1 year

* Please refer to Waterco's warranty terms and conditions.

Opal + Hydrotuf

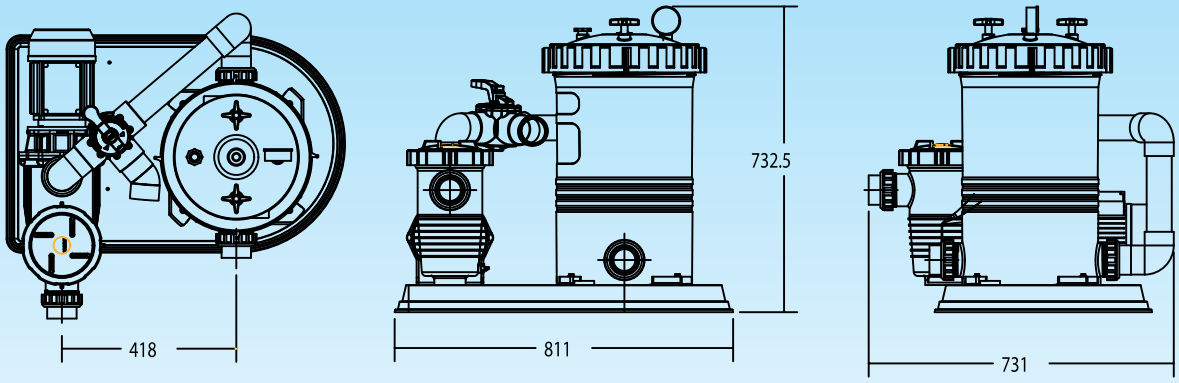

Technical Specifications

Model	Flow rate (lpm)		Motor (hp)	Motor input (kW)	Filter Surface Area ft²	Filter Surface Area m²	Weight (kg)
	8m	10m					
Opal 135 + Hydrotuf 100	260	220	1.00	0.86	135	12.50	30.00
Opal 135 + Hydrotuf 125	280	245	1.25	0.95	135	12.50	30.00
Opal 135 + Hydrotuf 150	340	300	1.50	1.10	135	12.50	30.00
Opal 180 + Hydrotuf 150	340	300	1.50	1.10	180	16.70	30.00

Phase	Volts	Cycle	RPM
1	220- 240	50	2860

Opal + Hydrotuf + MultiCyclone

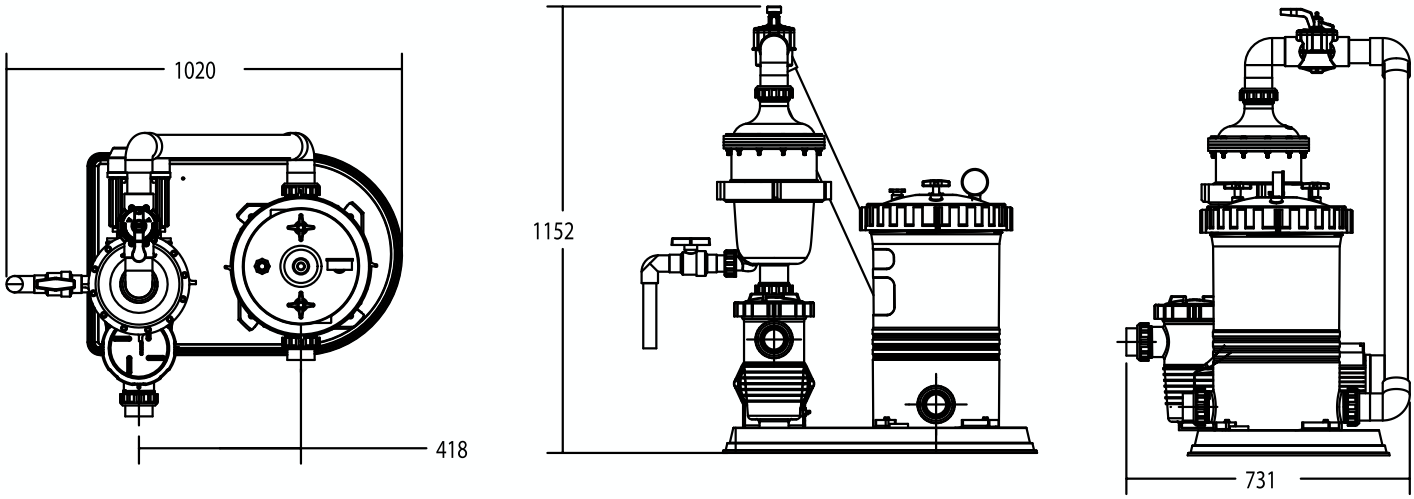

Technical Specifications

Model	Flow rate (lpm)		Motor (hp)	Motor input (kW)	Filter Surface Area ft²	Filter Surface Area m²	Weight (kg)
	10m	12m					
Opal 135 + Hydrotuf 100 + MultiCyclone	220	170	1.00	0.86	135	12.50	40.00
Opal 135 + Hydrotuf 125 + MultiCyclone	245	190	1.25	0.95	135	12.50	40.00
Opal 135 + Hydrotuf 150 + MultiCyclone	300	250	1.50	1.10	135	12.50	40.00
Opal 180 + Hydrotuf 150 + MultiCyclone	300	250	1.50	1.10	180	16.70	40.00

Phase	Volts	Cycle	RPM
1	220- 240	50	2860

OFFICES - AUSTRALIA
NSW - Sydney (Head Office)
Tel: +61 2 9898 8600

QLD - Brisbane
Tel: +61 7 3299 9900

VIC/TAS - Melbourne
Tel: +61 3 9764 1211

WA - Perth
Tel: +61 8 9273 1900

SA/NT - Adelaide
Tel: +61 8 8244 6000

OFFICES - OVERSEAS
Waterco (Europe) Limited
Sittingbourne, Kent. UK
Tel: +44 (0) 1795 521 733

Waterco (USA) Inc
Augusta, Georgia, USA
Tel: +1 706 793 7291

Waterco Canada
Longueuil, Quebec, Canada
Tel: +1 450 748 1421

Waterco (NZ) Limited
Auckland, New Zealand

Waterco (C) Limited
Guangzhou, China
Tel: +86 20 3222 2180

Waterco (Far East) Sdn Bhd
Selangor, Malaysia
Tel: +60 3 6145 6000

PT Waterco Indonesia
Jakarta, Indonesia
Tel: +62 21 4585 1481

Waterco Singapore Intl Pte Ltd
Nehsons Building, Singapore

Waterco France
SAINT PRIEST, France.
Tel: +33 4 72 79 33 30

DISTRIBUTED BY:

ZZB1327 09/11