Pretium GLX STR
PPREGLX-52SSSTSSFB0
Round

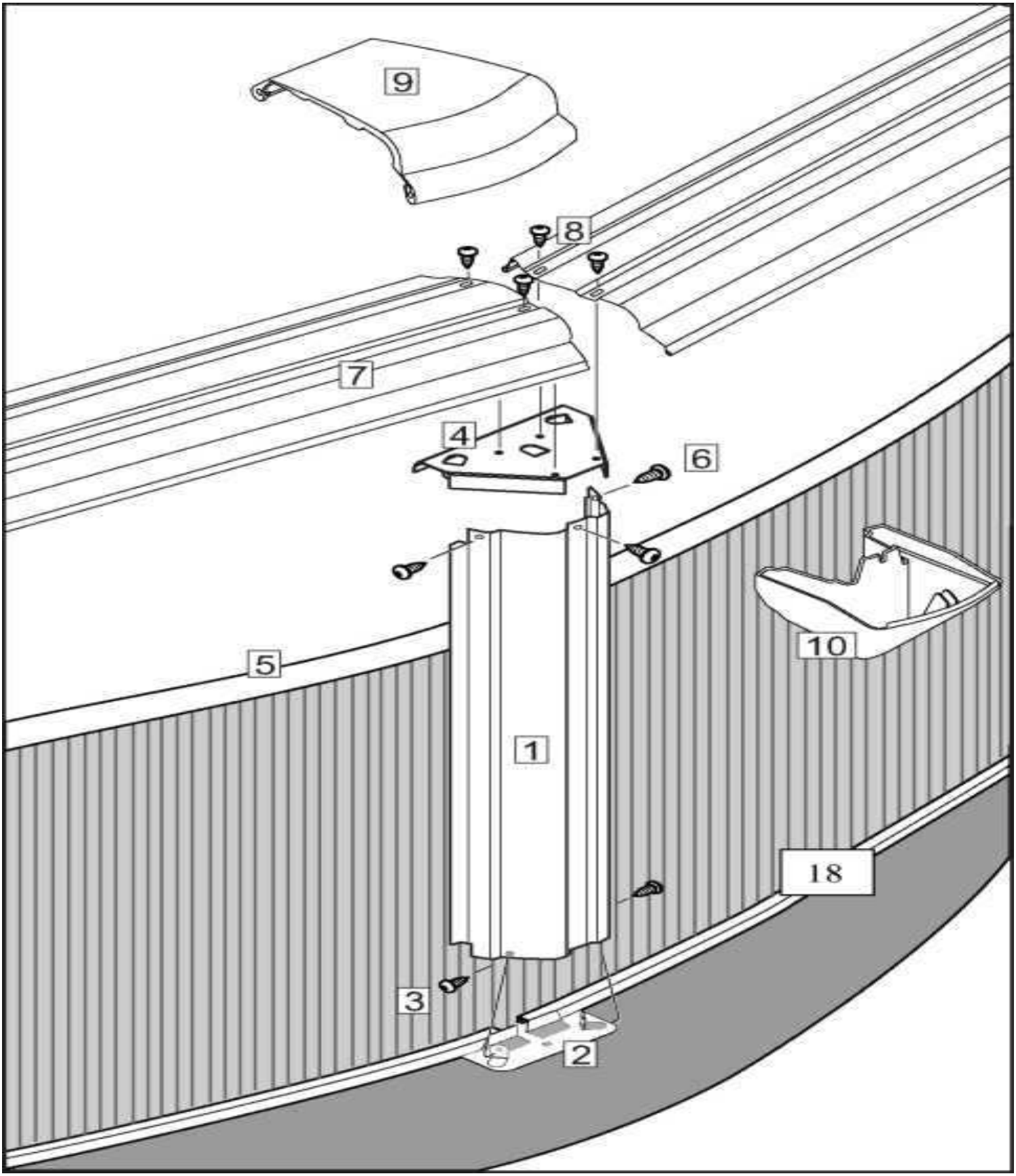

Product Description: **Pretium GLX Round** Revised Sept.2014

Product Code: **PPREGLX-52SSSTSSFB0**

				Quantity required for installation (by pool size)							
INDEX#	**DESCRIPTION**	**PARTS#**	**LENGTH**	**12**	**15**	**18**	**21**	**24**	**27**	**30**	**33**
2	Bottom Plate	1320101		10	10	12	14	16	18	20	22
4	Top Plate	1320102		10	10	12	14	16	18	20	22
18	Bottom Rail	1460048		10							
18	Bottom Rail	1460049			10						
18	Bottom Rail	1460050				12					
18	Bottom Rail	1460051					14				
18	Bottom Rail	1460052						16			
18	Bottom Rail	1460053							18		
18	Bottom Rail	1460102								20	
18	Bottom Rail	1460159									22
5	Slotted tube	1470096		10							
5	Slotted tube	1470097			10						
5	Slotted tube	1470098				12					
5	Slotted tube	1470099					14				
5	Slotted tube	1470100						16			
5	Slotted tube	1470101							18		
5	Slotted tube	1470102								20	
5	Slotted tube	1470103									22
n/a	Slotted tube Connector	1470108	6''	10	10	12	14	16	18	20	22
n/a	Round Coping	1382480	47''	10	13	15	17	20	22	25	27
7	Top ledge	1450872	45-15/32''	10							
7	Top ledge	1450873	56-27/32''		10	12	14	16	18	20	22
1	Upright	1440512	51-1/2''	10	10	12	14	16	18	20	22
9	Ledge cover	1490837		10	10	12	14	16	18	20	22
10	Ledge cover - lower	1490849		10	10	12	14	16	18	20	22
n/a	DVD	36877		1	1	1	1	1	1	1	1
3,6,8	Hardware Pack (Qty. - 59)	1184299				2	1				1
3,6,8	Hardware Pack (Qty. - 77)	1184300					1	2	1		
3,6,8	Hardware Pack (Qty. - 95)	1184301		1	1				1	2	2
	Screw #12-5/8	1184105		95	95	118	136	154	172	190	249
	Wall			1	1	1	1	1	1	1	1
	Wall joiner bar	11823		2	2	2	2	2	2	2	2