NOTE:
POOLS UTILIZING SALT CHLORINE GENERATORS CAN POSE A SIGNIFICANT HAZARD TO POOL EQUIPMENT, INCLUDING A FASTLANE PRO. PROPER BONDING AND WATER CHEMISTRY CONTROL BECOME CRITICAL. USE OF SACRIFICIAL ANODE IS RECOMMENDED.

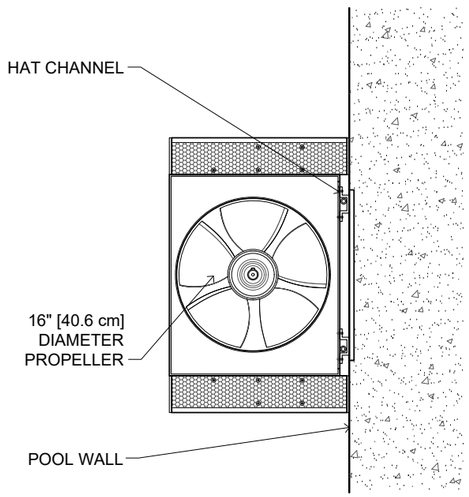

SECTION A-A

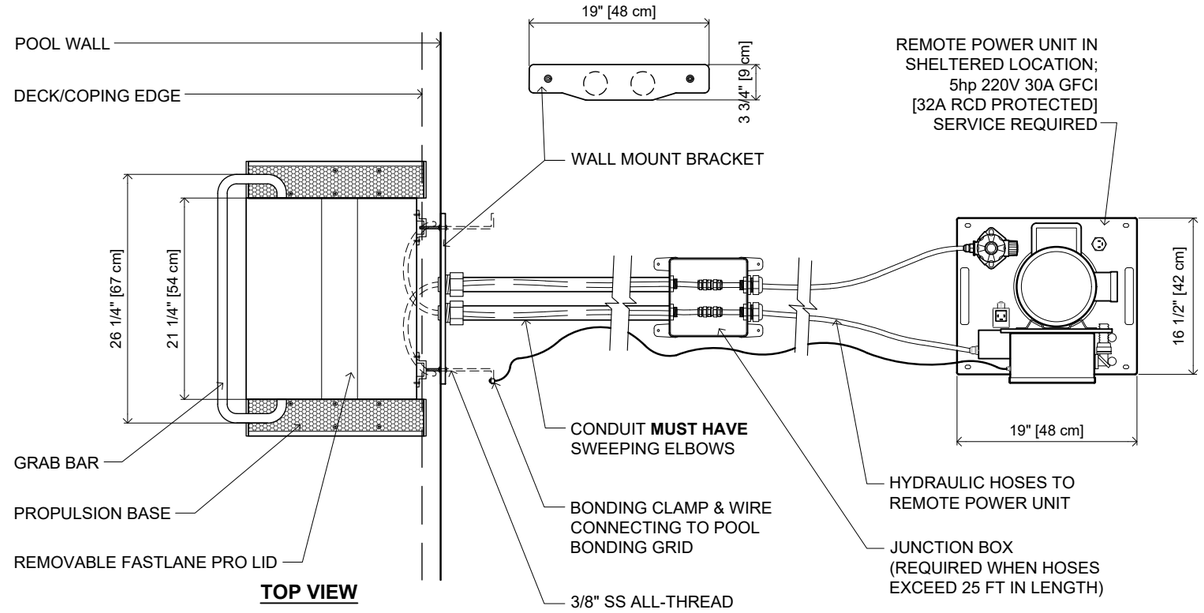

TOP VIEW

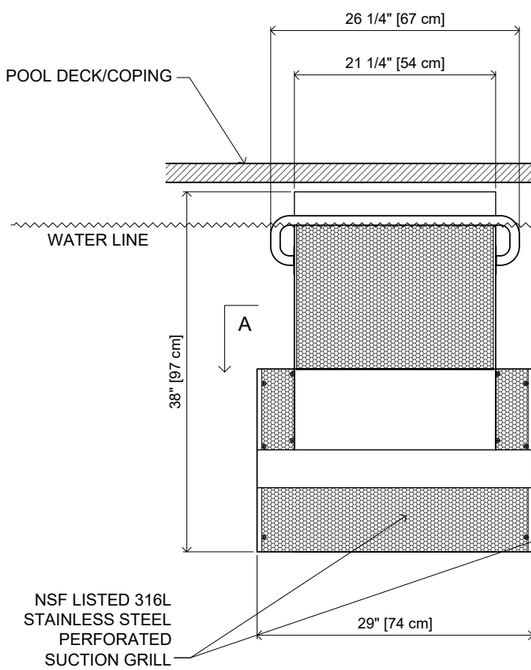

FRONT VIEW

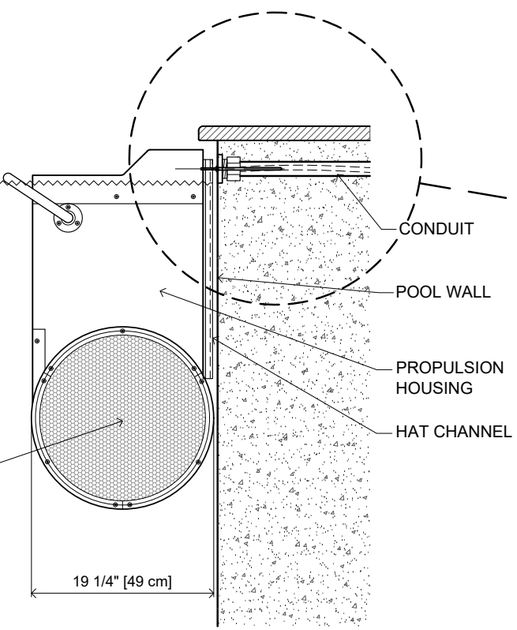

SIDE VIEW

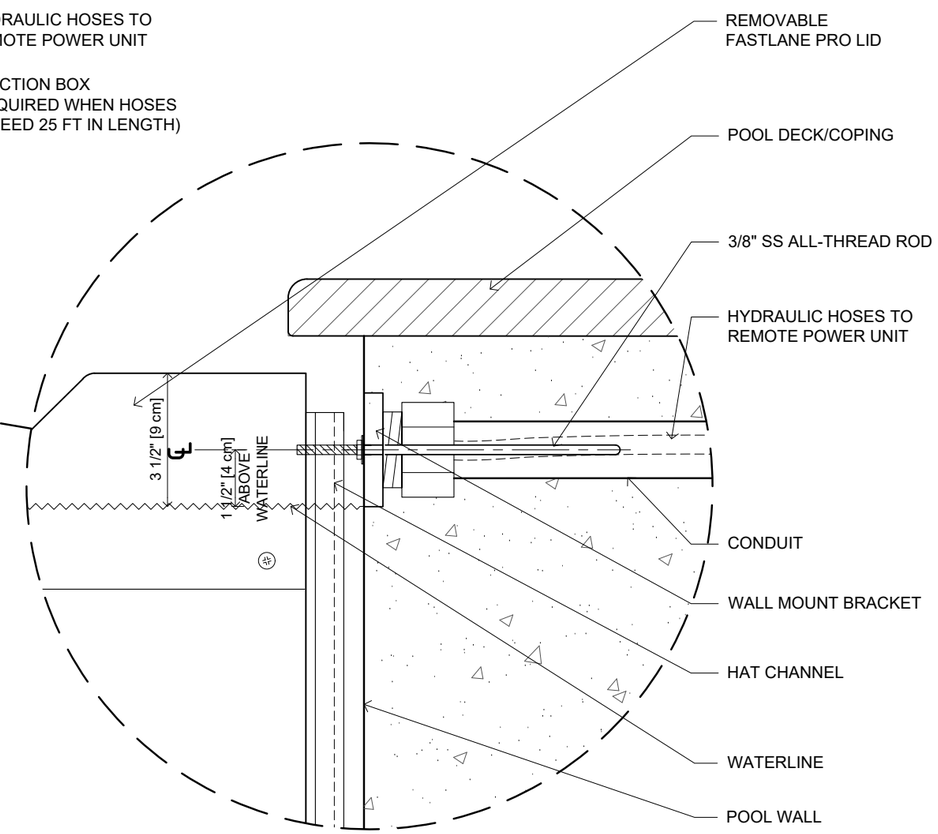

DETAIL A

ENDLESS POOLS SWIMMING MACHINES
1601 Dutton Mill Road, Aston PA 19014
www.endlesspools.com
swim@endlesspools.com 800-732-8660

2001779 APSP - 16 (VGB 2008) COMPLIANT

WALL MOUNT FASTLANE PRO

ANCHORED TO POOL WALL

HYDRAULIC LINES THRU POOL WALL

FASTLANE DETAILS

DRAWING NO.

EP-15.2.0

REV: 2019/12/12